MODEL NUMBER EP7501

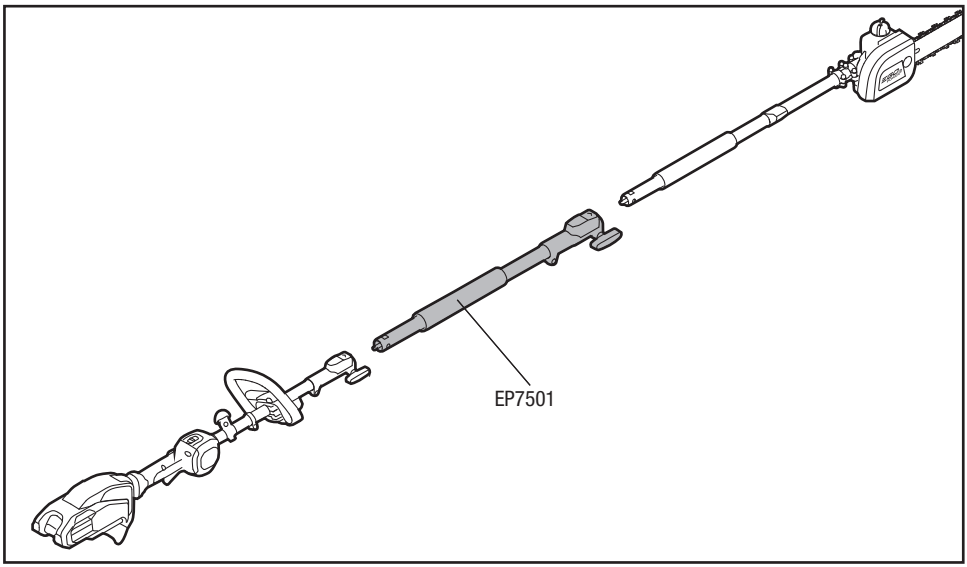

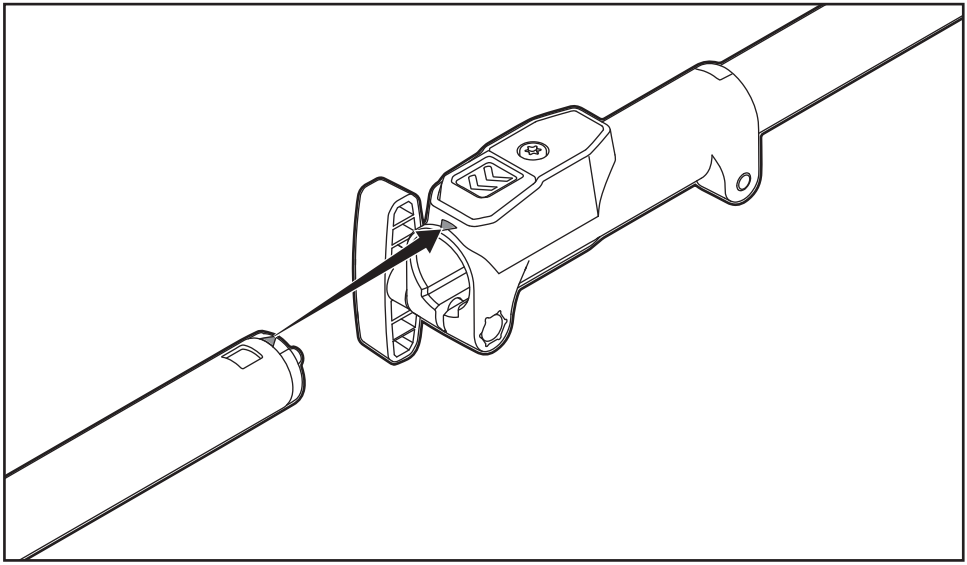

EGOPOWERPLUS.COM